15-213

"The course that gives CMU its Zip!"

Machine-Level Programming I: Introduction Sept. 8, 1998

Topics

- Assembly Programmer's Execution Model
- Arithmetic Instructions
- Memory Instructions
- Transfers of Control
- Comparison to actual Alpha 21164 processor

Alpha Processors

Reduced Instruction Set Computer (RISC)

- **Simple instructions with regular formats**
- **Key Idea: *make the common cases fast!***
  - infrequent operations can be synthesized using multiple instructions

Assumes compiler will do optimizations

- **e.g., scalar optimization, register allocation, scheduling, etc.**
- **ISA designed for *compilers*, not assembly language programmers**

A 2nd Generation RISC Instruction Set Architecture

- **Designed for superscalar processors (> 1 inst per cycle)**
- **Designed as a 64-bit ISA from the start**

Very High Performance Machines

- **Alpha has been the clear performance leader for many years now**

Assembly Programmer's View

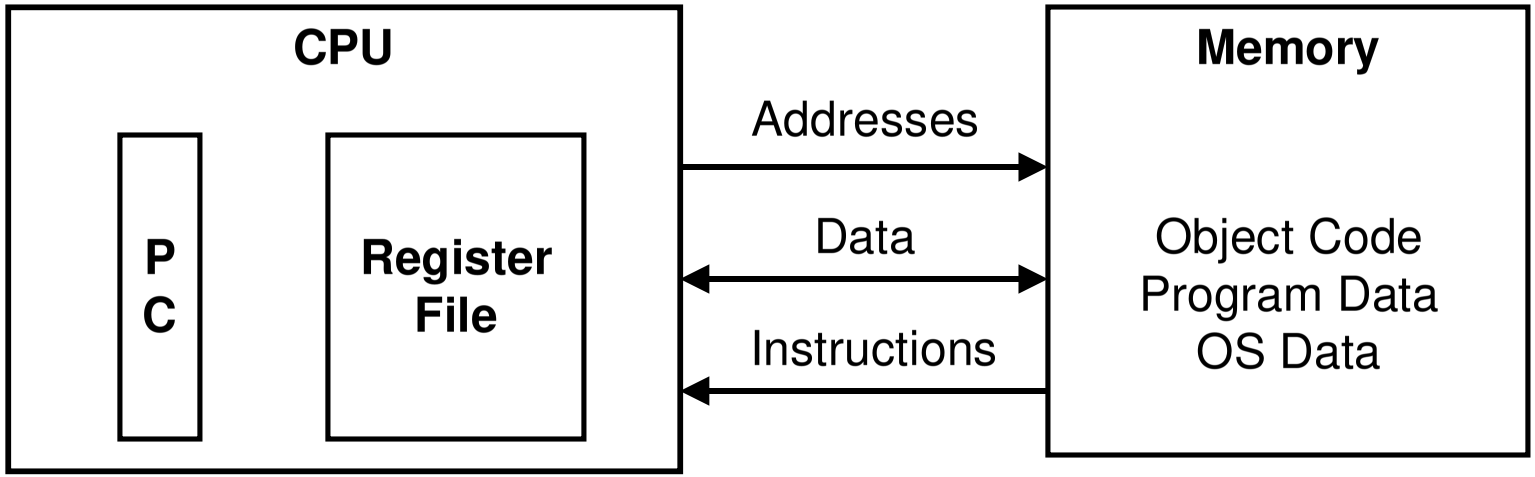

Programmer-Visible State

- **PC Program Counter**
  - Address of next instruction
- **Register File**
  - Heavily used program data
- **Memory**
  - Byte addressable array
  - Code, user data, (some) OS data

Turning C into Object Code

- **Code in files** `p1.c p2.c`
- **Compile with command:** `gcc -O p1.c p2.c -o p`
  - Use optimizations (`-O`)
  - Put resulting binary in file `p`

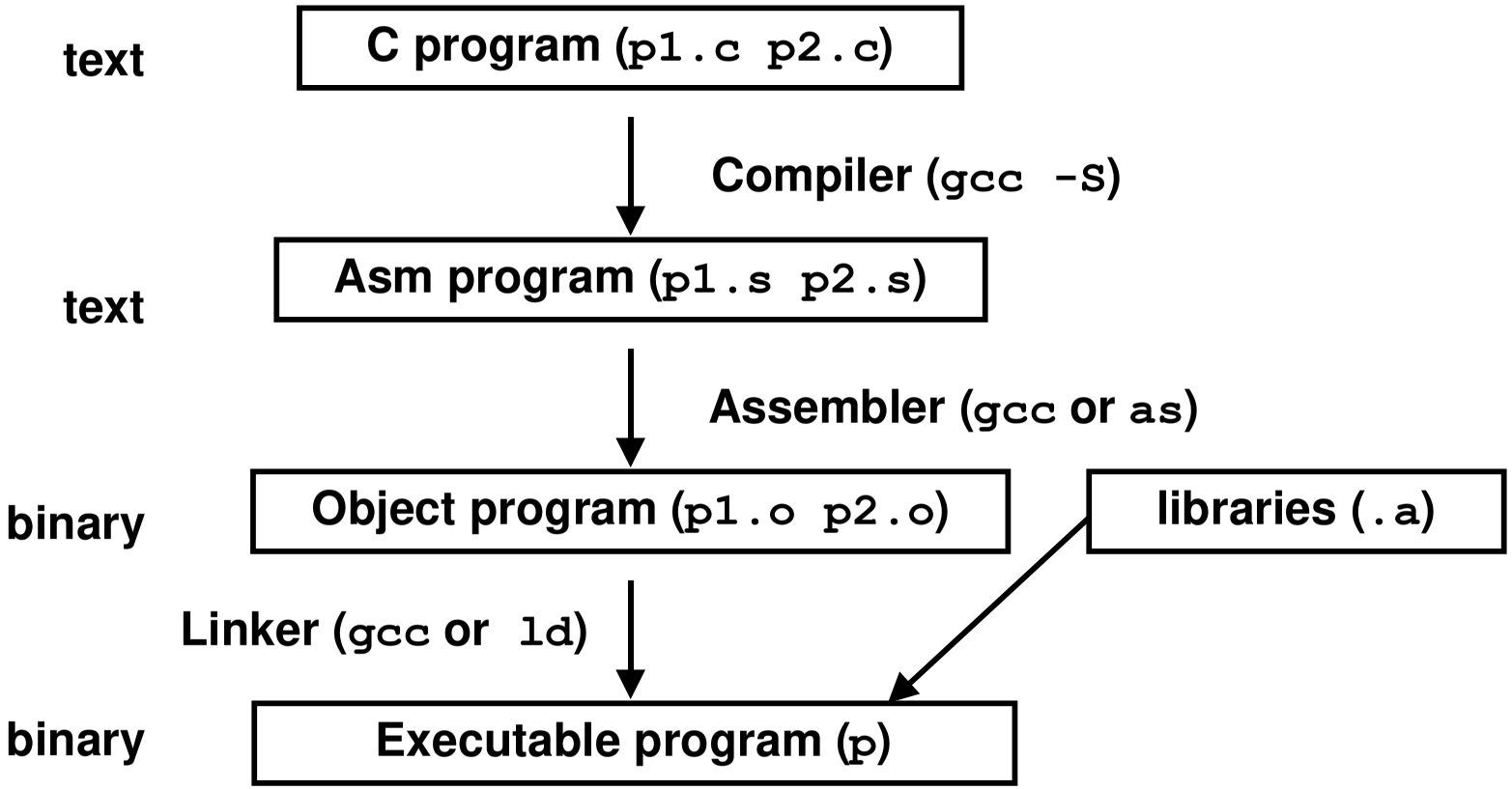

Compiling Into Assembly

C Code

```
long int arith(long int x,
    long int y, long int z)
{
  long int t1 = x+y;
  long int t2 = z+t1;
  long int t3 = x+4L;
  long int t4 = y * 48L;
  long int t5 = t3 + t4;
  long int rval = t2 * t5;
  return rval;
}
```

Generated Assembly

```
arith:
arith..ng:
    .frame  $30,0,$26,0
    .prologue 0
    addq    $16,$17,$1
    addq    $18,$1,$0
    addq    $16,4,$16
    s4subq  $17,$17,$17
    sll     $17,4,$17
    addq    $16,$17,$16
    mulq    $0,$16,$0
    ret     $31,($26),1
    .end arith
```

Obtain with command

```
gcc -O -S code.c
```

Produces file `code.s`

Assembly Characteristics

Minimal Data Types

- **"Integer" data of 1, 2, 4, or 8 bytes**
  - Data values
  - Addresses (untyped pointers)
- **Floating point data of 4 or 8 bytes**
- **No aggregate types such as arrays or structures**
  - Just contiguously allocated bytes in memory

Primitive Operations

- **Perform arithmetic function on register data**
- **Transfer data between memory and register**
  - Load data from memory into register
  - Store register data into memory
- **Transfer control**
  - Unconditional jumps to/from procedures
  - Conditional branches

Object Code

Code for `arith`

```
0x1200012d0:
   0x42110401
   0x42410400
   0x42009410
   0x42310571
   0x4a209731
   0x42110410
   0x4c100400
   0x6bfa8001
```

- **Total of 8 instructions**
- **Each 4 bytes**
- **Starts at address `0x1200012d0`**

Assembler

- **Translates `.s` into `.o`**
- **Binary encoding of each instruction**
- **Nearly-complete image of executable code**
- **Missing linkages between code in different files**

Linker

- **Resolves references between files**
- **Combines with run-time libraries**
  - At the very least includes `libc.a`
  - E.g., code for `malloc`, `printf`

Machine Instruction Example

C Code

```
long int t1 = x+y;
```

- **Add two signed 64-bit integers**

Assembly

```
addq $16,$17,$1
```

- **Add 2 8-byte integers**
  - "Quad" words in Alpha parlance
  - Same instruction whether signed or unsigned
- **Operands & result in registers:**

  $16: `x`

  $17: `y`

  $1: `t1`

Object Code

```
0x1200012d0:  0x42110401
```

- **32-bit pattern**
- **Stored at address `0x1200012d0`**

Encoding of Machine Instruction

Format for Register-Register Arithmetic Instructions

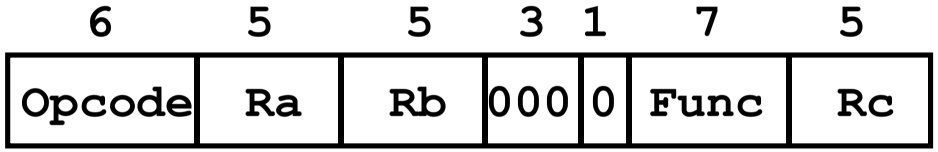

- `Opcode` + `Func` fields determine operation `<op>`
- Effect is `Reg[Rc] = Reg[Ra] <op> Reg[Rb]`

Decoding Hex Format

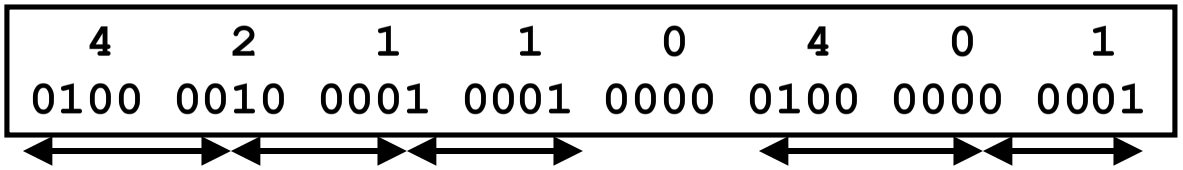

Regrouping into Instruction Fields

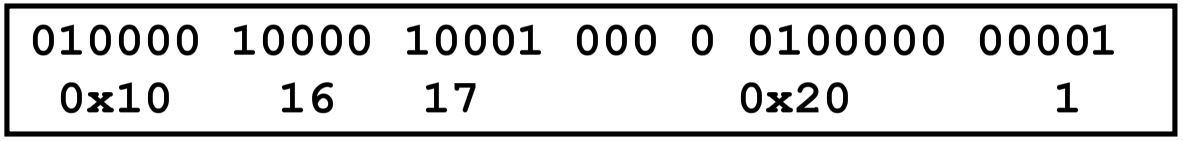

- Opcode `0x10` + Func `0x20` encodes `addq`

```
addq $16,$17,$1
```

Disassembling Object Code

Object

```
0x1200012d0:
  0x42110401
  0x42410400
  0x42009410
  0x42310571
  0x4a209731
  0x42110410
  0x4c100400
  0x6bfa8001
```

Disassembled

```
0x1200012d0: 42110401 addq   r16, r17, r1
0x1200012d4: 42410400 addq   r18, r1, r0
0x1200012d8: 42009410 addq   r16, 0x4, r16
0x1200012dc: 42310571 s4subq r17, r17, r17
0x1200012e0: 4a209731 sll    r17, 0x4, r17
0x1200012e4: 42110410 addq   r16, r17, r16
0x1200012e8: 4c100400 mulq   r0, r16, r0
0x1200012ec: 6bfa8001 ret    r31, (r26), 1
```

Disassembler

`dis -h p`

- Useful tool for examining object code
- Analyzes bit pattern of series of instructions
- Produces approximate rendition of assembly code
- Can be run on either `a.out` (complete executable) or `.o` file

Implementing Arithmetic Operations

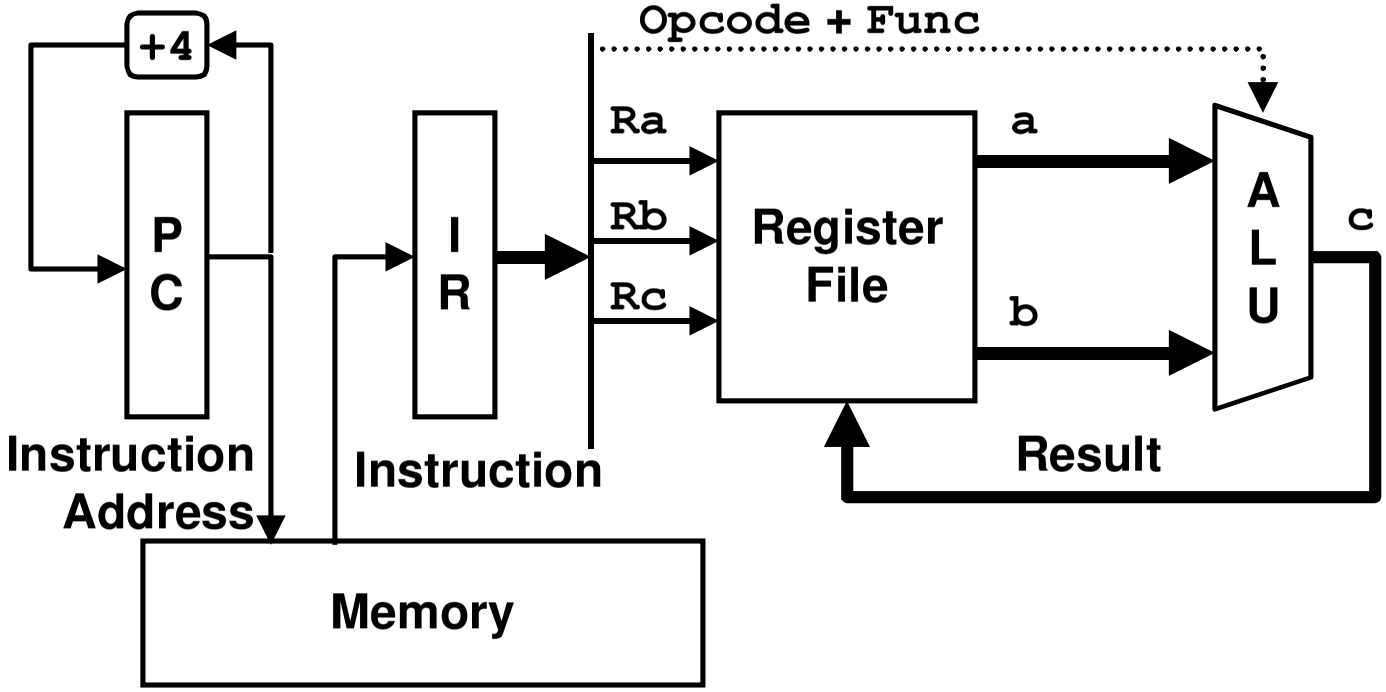

1. Fetch

```
IR = Mem[PC]
a = Reg[Ra]
b = Reg[Rb]
```

2. Execute

```
c = a <op> b
```

3. Update

```
Reg[Rc] = c
PC = PC + 4
```

Arithmetic Operation Example

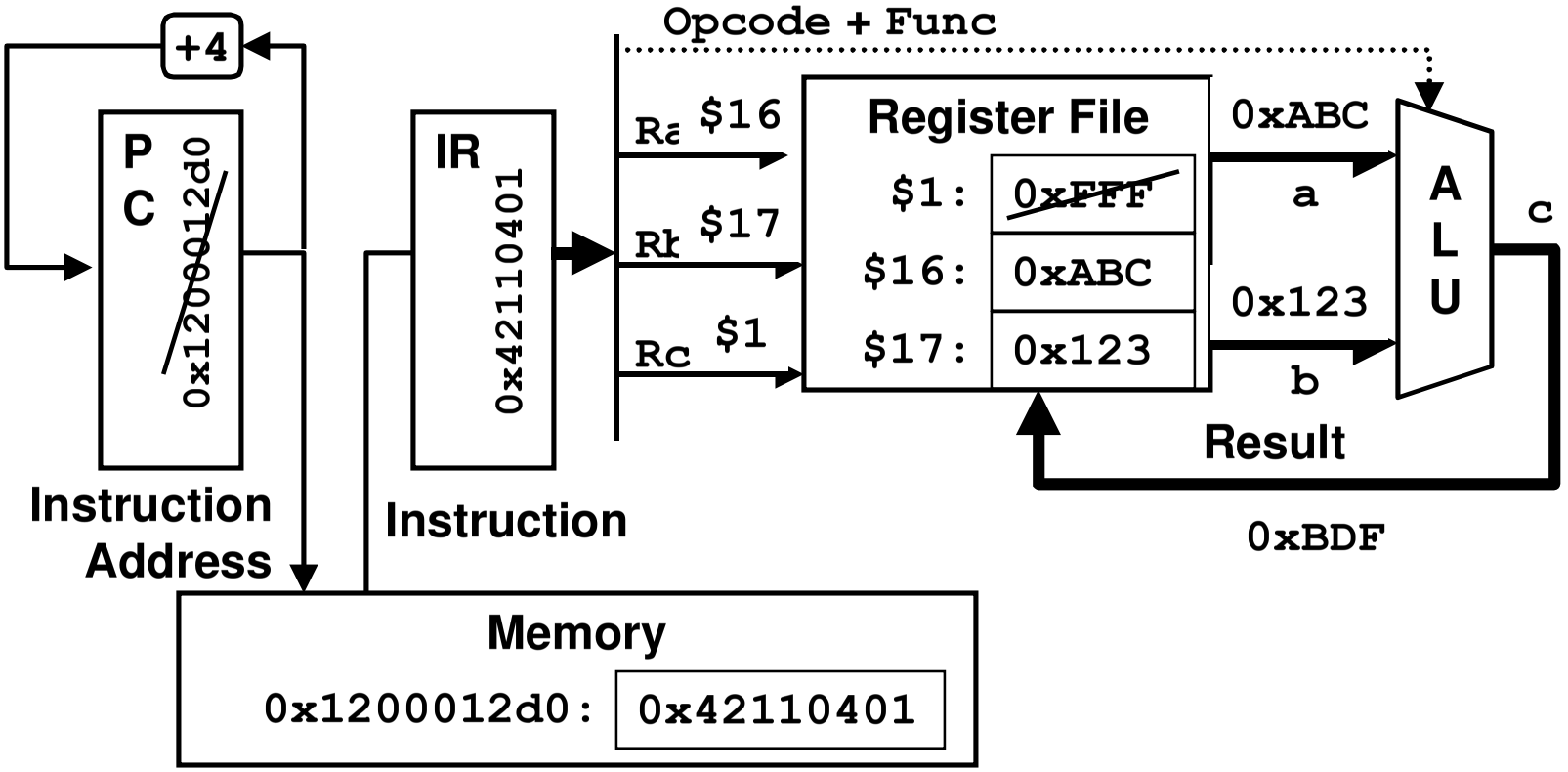

1. Fetch

```
IR = Mem[PC]
a = Reg[Ra]
b = Reg[Rb]
```

2. Execute

```
c = a <op> b
```

3. Update

```
Reg[Rc] = c      0xBDF
PC = PC + 4      0x1200012d4
```

Executing `Arith`

```
arith(x, y, z)
{
  t1 = x+y;
  t2 = z+t1;
  t3 = x+4L;
  t4 = y * 48L;
  t5 = t3 + t4;
  rval = t2 * t5;
  return rval;
}
```

Op	a <op> b
addq	a + b
s4subq	4*a - b
sll	a << b
mulq	a * b

```
addq $16,$17,$1
addq $18,$1,$0
addq $16,4,$16
s4subq $17,$17,$17
sll $17,4,$17
addq $16,$17,$16
mulq $0,$16,$0
ret $31,($26),1
```

$0	$1	$16	$17	$18
-	-	x	y	z
-	t1	x	y	z
t2	t1	x	y	z
t2	t1	t3	y	z
t2	t1	t3	3*y	z
t2	t1	t3	t4	z
t2	t1	t5	t4	z
rval	t1	t5	t4	z

Logical Operation Example

```
long int logical(long int x, long int y)
{
  long int t1 = x^y;
  long int t2 = t1 >> 17;
  long int mask = (1L<<13) - 7L;
  long int rval = t2 & mask;
  return rval;
}
```

- **Logical operations similar to arithmetic operations**
- **Both have two formats**
  - RR: Operands **a** and **b** from registers

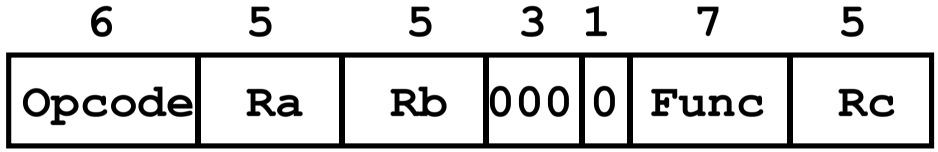

  - RI: Operand **a** from register, **b** is 8-bit unsigned "literal"

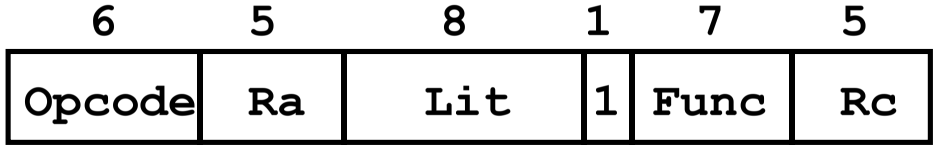

```
logical(x, y)
{
  t1 = x^y;
  t2 = t1 >> 17;
  mask = (1L<<13) - 7L;
  rval = t2 & mask;
  return rval;
}
```

Executing `Logical`

Op	a <op> b
xor	a ^ b
sra	a >> b
and	a & b

```
xor $16,$17,$17
sra $17,17,$17
lda $0,8185
and $17,$0,$0
ret $31,($26),1
```

Special trick to get big constant

$0	$16	$17
-	x	y
-	x	t1
-	x	t2
mask	x	t2
rval	x	t2

```
1L << 13 = 8192
8192 - 7 = 8185
```

Load & Store Instructions

Load Operation

- Read (load) from memory
- Write to register

```
ldq Ra, Offset(Rb)
```

- Arguments
  - `Ra` Destination Reg.
  - `Rb` Base address Reg.
  - `Offset` Offset from base
    - » Between –32,768 and 32,767
- Effective Address

```
EA = Reg[Rb] + Offset
```

- Operation

```
Reg[Ra] = Mem[EA]
```

Store Operation

- Read from register
- Write (store) to memory

```
stq Ra, Offset(Rb)
```

- Arguments
  - `Ra` Source Reg.
  - `Rb` Base address Reg.
  - `Offset` Offset from base
    - » Between –32,768 and 32,767
- Effective Address

```
EA = Reg[Rb] + Offset
```

- Operation

```
Mem[EA] = Reg[Ra]
```

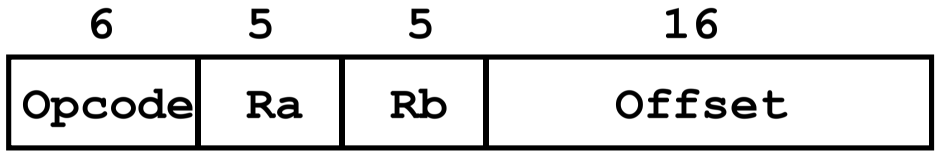

Implementing Load Operation

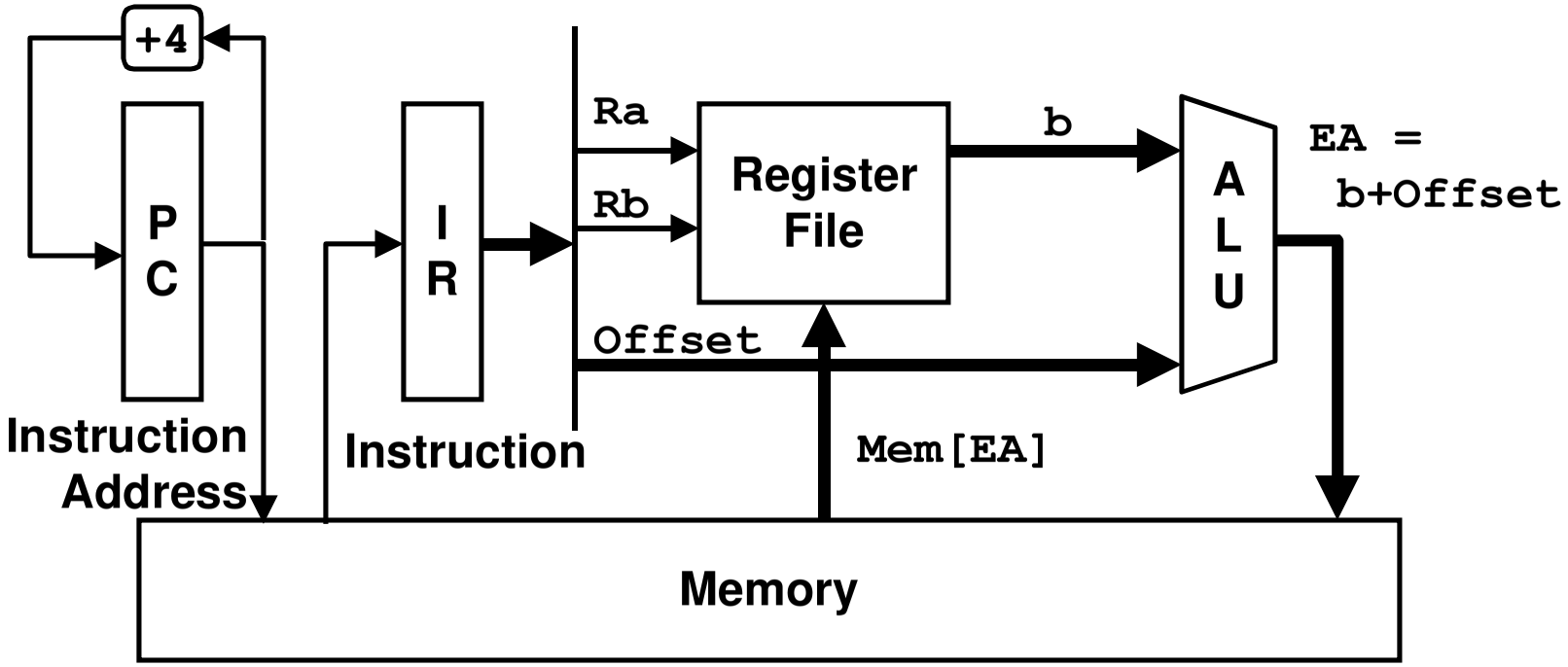

1. Fetch

```
IR = Mem[PC]
b = Reg[Rb]
```

2. Execute

```
EA = b + Offset
Result = Mem[EA]
```

3. Update

```
Reg[Ra] = Result
PC = PC + 4
```

Implementing Store Operation

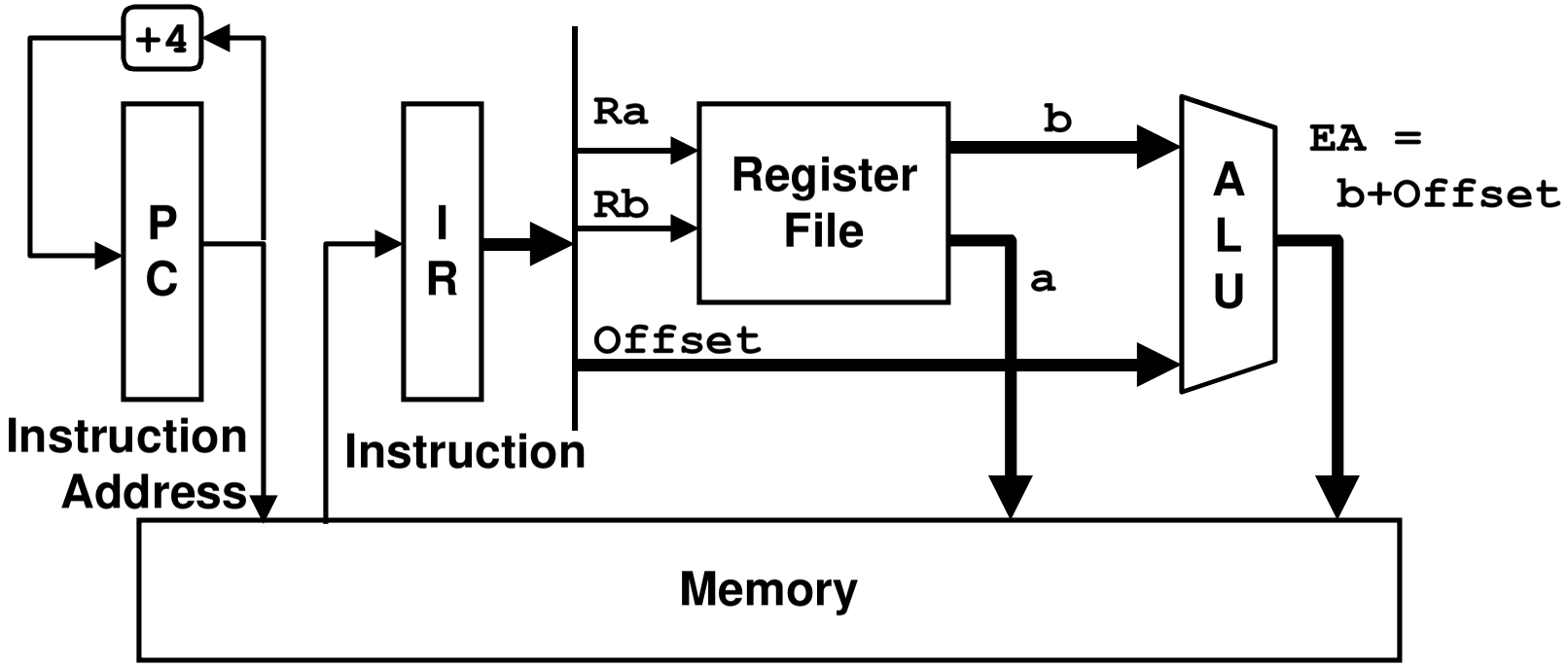

1. Fetch

```
IR = Mem[PC]
a = Reg[Ra]
b = Reg[Rb]
```

2. Execute

```
EA = b + Offset
```

3. Update

```
Mem[EA] = a
PC = PC + 4
```

Load & Store Example

```
void swap(long int *xp, long int *yp)
{
  long int t0 = *xp;
  long int t1 = *yp;
  *xp = t1;
  *yp = t0;
}
```

Realization of C Pointers

- **Pointer is address of object**
- **Manipulated as 64-bit signed integer**
- **Machine has no notion of pointer type**
  - Does not distinguish `(char *)`, `(int *)`, `(int **)`, etc.

Executing Swap

```
swap(*xp, *yp)
{
   t0 = *xp;
   t1 = *yp;
   *xp = t1;
   *yp = t0;
}
```

	$1	$2	$16	$17	Mem[xp]	Mem[yp]
	-	-	xp	yp	X	Y
ldq $1,0($16)	X	-	xp	yp	X	Y
ldq $2,0($17)	X	Y	xp	yp	X	Y
stq $2,0($16)	X	Y	xp	yp	Y	Y
stq $1,0($17)	X	Y	xp	yp	Y	X
ret $31,($26),1						

XOR-Based Swap

```
void xor_swap(long int *xp,
     long int *yp)
{
   *xp = *xp ^ *yp;
   *yp = *xp ^ *yp;
   *xp = *xp ^ *yp;
}
```

```
ldq $2,0($16)
ldq $1,0($17)
xor $2,$1,$2
stq $2,0($16)
ldq $1,0($17)
xor $2,$1,$2
stq $2,0($17)
ldq $1,0($16)
xor $1,$2,$1
stq $1,0($16)
ret $31,($26),1
```

= $1?

Reuse earlier result?

Very Inefficient Code

- 4 loads, 3 stores, 3 ALU ops
- vs. 2 loads, 2 stores for `swap`

Apparent Non-Optimality

- Why does it need to keep reloading operand?
- Hint: required to preserve behavior for special argument combination

Conditional Branch Instructions

Format

`b`*`COND`* `Ra, target`

- *`COND`* **describes branch condition**
- `target` **computed from** `PC+4` **and** `Displacement`
- **Assembler allows use of symbolic labels**

Possible Conditions	
`eq`	`a == 0`
`ne`	`a != 0`
`gt`	`a > 0`
`ge`	`a >= 0`
`lt`	`a < 0`
`le`	`a <= 0`
`lbc`	`a&1 == 0`
`lbs`	`a&1 != 0`

Operation

- **Compare** `Reg[Ra]` **to 0**
- **Go to** `target` **if condition satisfied**
- **Otherwise proceed with next instruction**

Implementing Branch Operation

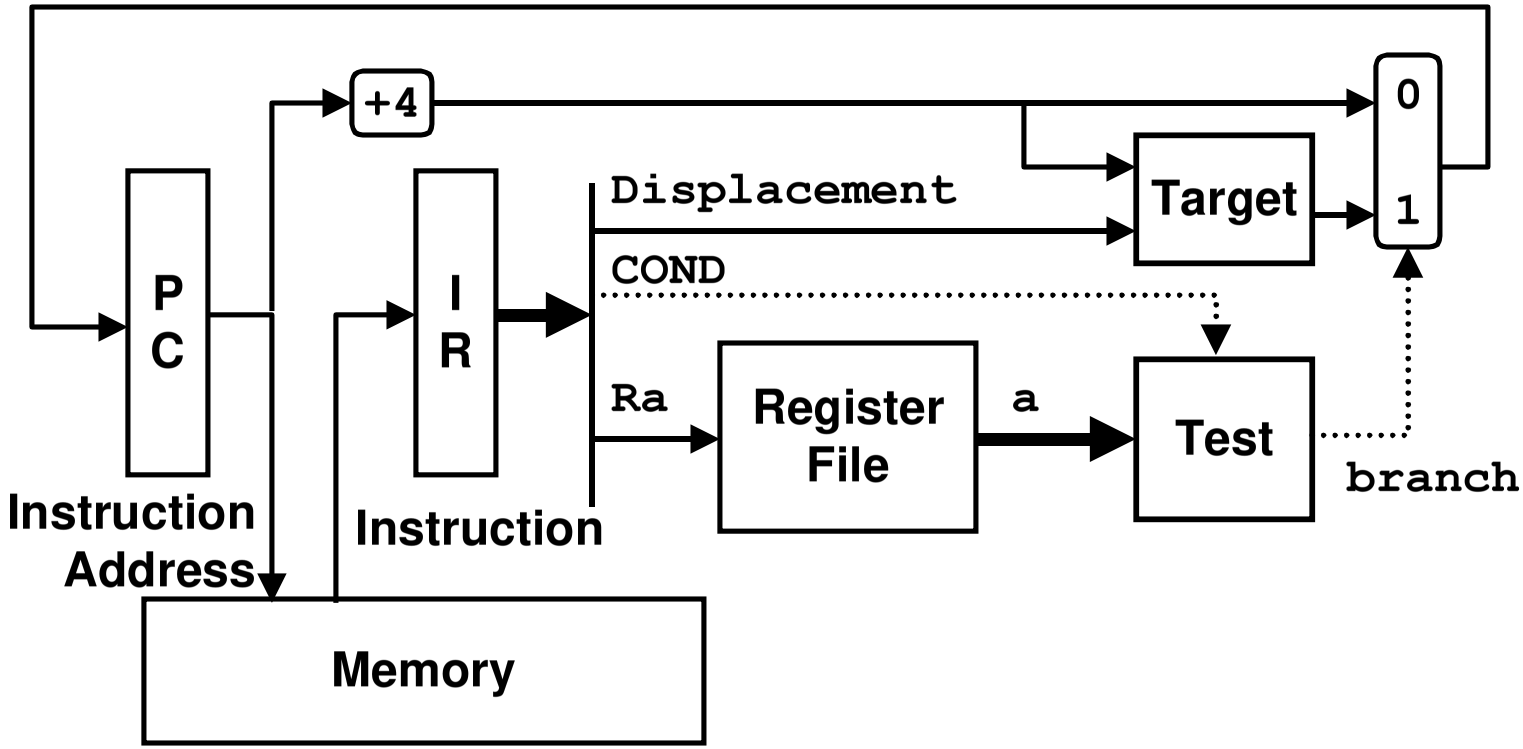

1. Fetch

```
IR = Mem[PC]
a = Reg[Ra]
```

2. Execute

```
branch = Cond(a)
target =
  Target(PC+4,
    Displacement)
```

3. Update

```
if (branch)
  PC = target
else
  PC = PC+4
```

Conditional Branch Example

```
long int deref(long int *xp)
{
  long int rval = 0;
  if (xp != 0) {
    rval = *xp;
  }
  return rval;
}
```

Dereferencing Invalid Pointer

- **If address valid, will return whatever is at that address**
- **If address is invalid, will signal error**
  - "Segmentation fault"
  - Attempt to access portion of virtual address space that hasn't been allocated yet

Executing `Deref(0)`

```
deref(*xp)
{
  rval = 0;
  if (xp != 0) {
    rval = *xp;
  }
  return rval;
}
```

Op	`a <op> b`
`bis`	`a | b`
Special Register	
`$31`	`== 0`

		$0	$16
		-	xp=0
	`bis $31,$31,$0`	0	0
	`beq $16, null`	0	0
Skipped →	`ldq $0,0($16)`		
	`null:`		
	`ret $31,($26),1`	0	0

Executing `Deref(≠0)`

```
deref(*xp)
{
  rval = 0;
  if (xp != 0) {
    rval = *xp;
  }
  return rval;
}
```

Op	a <op> b
bis	a | b
Special Register	
$31	== 0

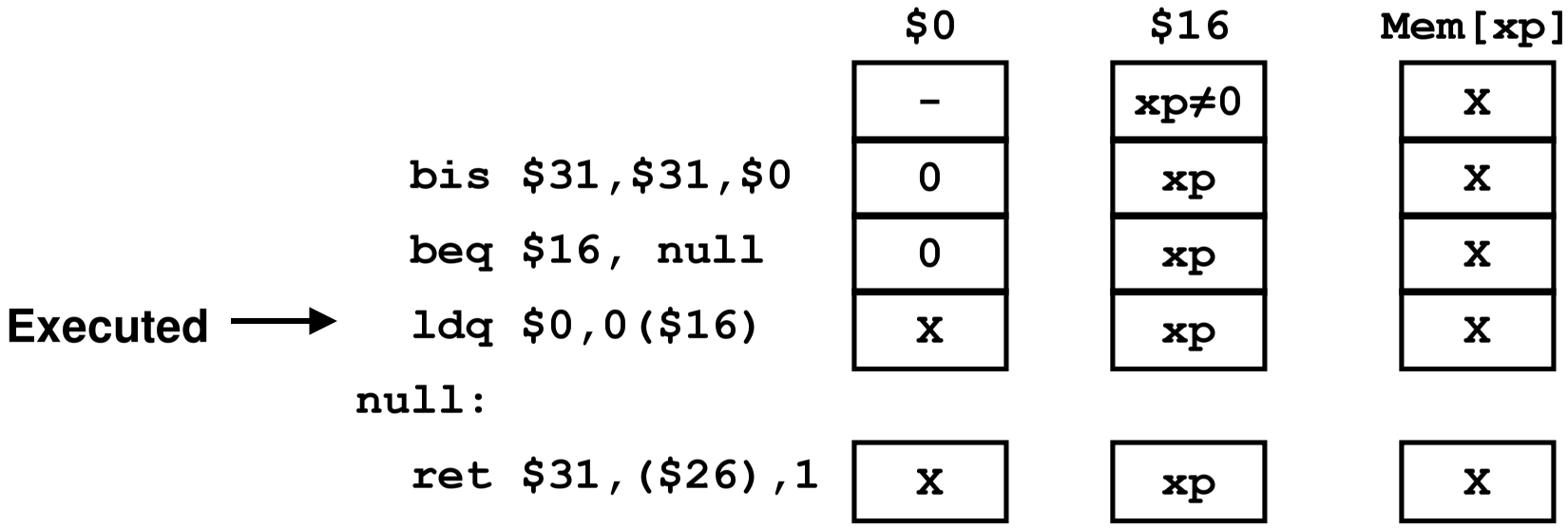

Conditional Branch Example #2

```
long int absval(long int x)
{
  long int rval = x;
  if (x < 0) {
    rval = -x;
  }
  return rval;
}
```

Assembly

- `x` in `$16`
- `rval` in `$0`
- `$31` always `0`

```
   subq $31,$16,$0   # rval = -x
   blt $16, neg      # if x < 0 goto neg
   bis $16, $16, $0  # else rval = x
neg:
   ret $31,($26),1   # return
```

Conditional Move Instructions

Formats

`cmove`*`COND`* `Ra, Rb, Rc`

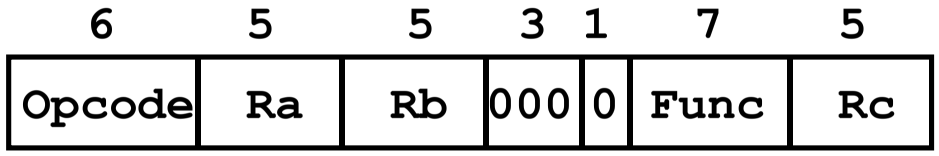

`cmove`*`COND`* `Ra, Lit, Rc`

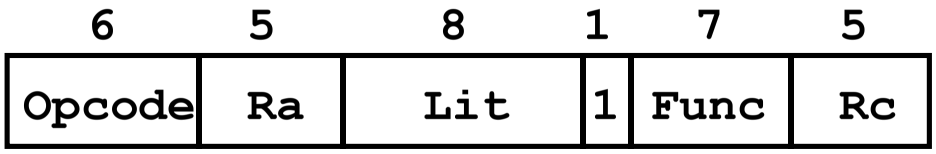

- Same formats as arithmetic instruction
- *COND* describes update condition
- `Opcode` + `Func` encode `COND`

Possible Conditions	
`eq`	`a == 0`
`ne`	`a != 0`
`gt`	`a > 0`
`ge`	`a >= 0`
`lt`	`a < 0`
`le`	`a <= 0`
`lbc`	`a&1 == 0`
`lbs`	`a&1 != 0`

Operation

- Compare `Reg[Ra]` to 0
- if `(cond) Reg[Rc] = Reg[Rb]`
- Else register `Rc` unchanged

Implementing Conditional Move

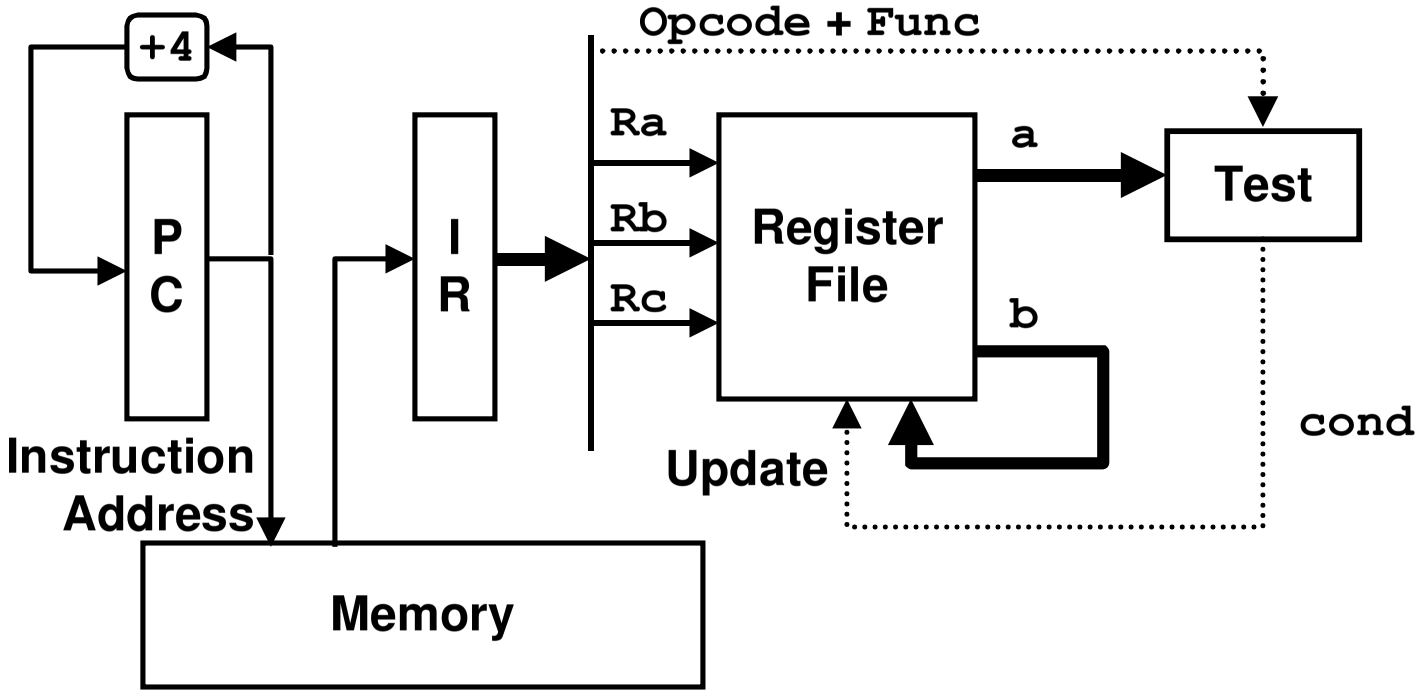

1. Fetch

```
IR = Mem[PC]
a = Reg[Ra]
b = Reg[Rb]
```

2. Execute

```
cond = Cond(a)
```

3. Update

```
if (cond)
  Reg[Rc] = b
PC = PC + 4
```

Conditional Move Example

```
long int absval(long int x)
{
  long int rval = x;
  if (x < 0) {
    rval = -x;
  }
  return rval;
}
```

Assembly

- `x` in `$16`
- `rval` in `$0`
- `$31` always `0`

```
subq $31,$16,$0     # rval = -x
cmovge $16,$16,$0   # if (x >= 0) rval = x
ret $31,($26),1     # return
```

Why Use Conditional Moves?

- Transfer of control disrupts flow of instructions through pipeline
- Especially when cannot reliably predict test outcome

Jump Instructions

Format

`jmp Ra, (Rb), Hint` **Jump**

`jsr Ra, (Rb), Hint` **Jump to Subroutine**

`ret Ra, (Rb), Hint` **Return from Subroutine**

- `Ra` **Register to store return pointer:** `PC+4`
  - Usually `$31` for `jmp` and `ret`
    - » Don't store return pointer
  - Usually `$26` for `jsr`
- `Rb` **Jump destination**
  - Usually $26 for `ret`
- `Hint` **Hint to help predict jump target address**
  - Don't worry about this
- **Assembler allows use of symbolic labels**

Operation

```
Reg[Ra] = PC+4
PC = Reg[Rb]
```

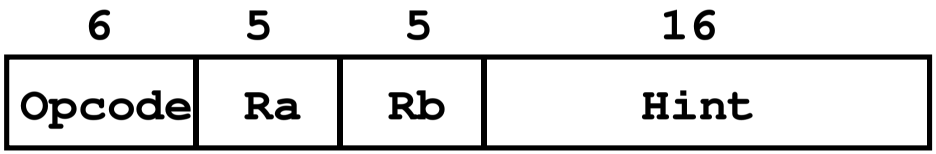

Implementing Jump Operations

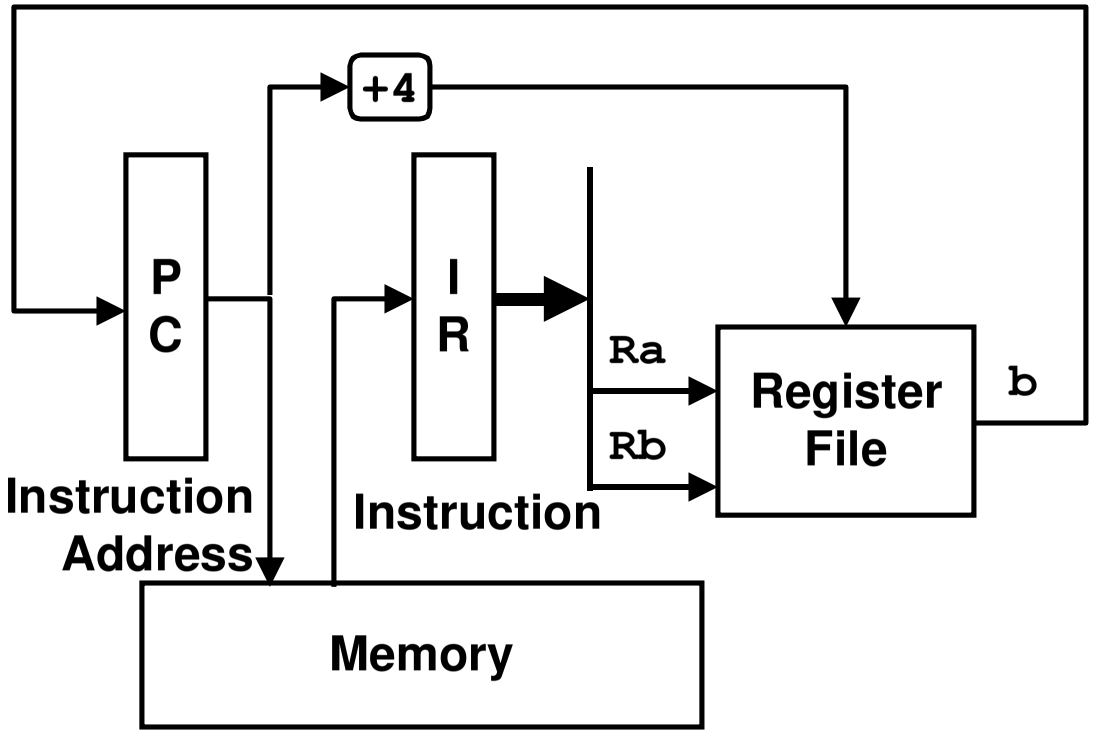

1. Fetch

```
IR = Mem[PC]
b = Reg[Rb]
```

2. Execute

3. Update

```
Reg[Ra] = PC+4
PC = b
```

Procedure Call/Return Example

```
long int abs_deref(long int *xp)
{
  long int x = deref(xp);
  long int rval = absval(x);
  return rval;
}
```

Data Passing Conventions

- Procedure arguments in registers `$16`, `$17`, ...
- Return result in `$0`

Executing `Abs_deref`

```
abs_deref(*xp)
{
   x = deref(xp);
   rval = absval(x);
   return rval;
}
```

Instruction Addresses

0x080:	abs_deref	call
0x200:	deref	entry
0x300:	absval	entry

	$0	$1	$16	$26
... # Stack stuff ...	-	-	xp	-
0x100: lda $1, deref	-	0x200	xp	-
0x104: jsr $26,($1),1	-	-	xp	0x108
# On return:	x	-	-	0x108
0x108: bis $0,$0,$16	x	-	x	0x108
0x10c: lda $1,absval	x	0x300	x	0x108
0x110: jsr $26,($1),1	-	0x300	x	0x114
# On return:	rval	-	-	0x114
... # Stack stuff ...				
0x11c: ret $31,($26),1	rval	-	-	0x084

Alpha 21164 Block Diagram

Four Caches

- Most recently accessed instructions, data, address translations

Two Integer Pipelines

- Perform integer instructions, load/store addresses, branch conditions

Two Floating Point Pipelines

- Floating point operations

Attempts to Predict Branches

- Whether or not taken
- Target address

Microprocessor Report '94

21164 Die Photo

Summary: Abstract Machines

Machine Models

C

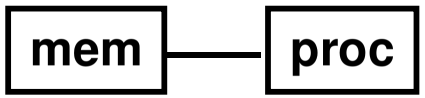

Assembly

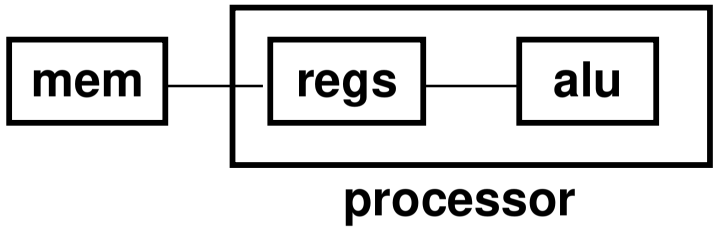

Data

1) `char`
2) `int`, `float`
3) `double`, `long`
4) `struct`, array
5) pointer

1) byte
2) 4-byte long word
3) 8-byte quad word
4) contiguous word allocation
5) address of initial byte

Control

1) loops
2) conditionals
3) `goto`
4) Proc. call
5) Proc. return

3) branch/jump
4) `jsr`
5) `ret`

Summary: Instruction Formats

Arithmetic Operations:

- all register operands
  - `addq $1, $7, $5`
- with a literal operand
  - `addq $1, 15, $5`

Loads & Stores:

- `ldq $1, 16($30)`

Branches:

- a single source register
  - `bne $1, label`

Jumps:
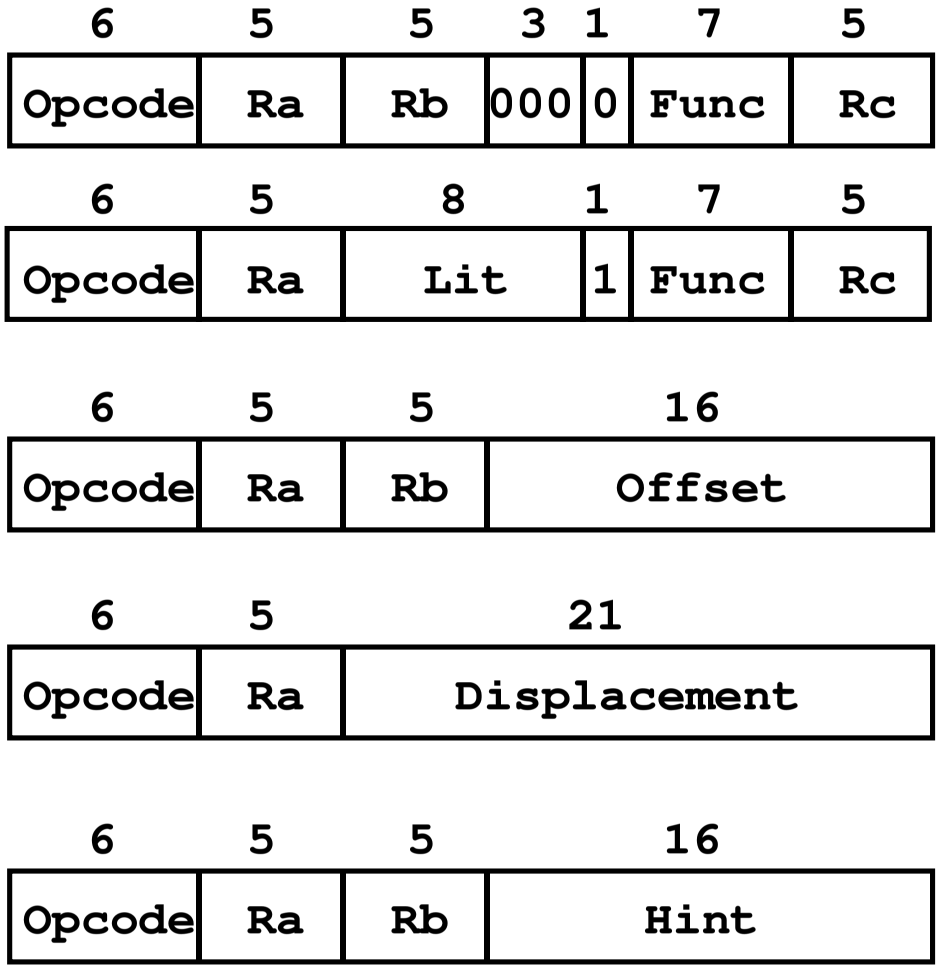
- one source, one dest reg
  - `jsr $26, ($1), hint`